SR-93 Series

SR-93R

SR-93N

Specifications:

6(2)A	250VAC	T125/55	5E4
10(3)A	250VAC	T125/55	
1A	250VAC	T125/55	

6(2)A	125VAC/250VAC	T125/55	5E4
10(3)A	125VAC /250VAC	T125/55	
16A GP	125VAC	T125/55	
1A	125VAC/250VAC	T125/55	

Intertek 4006154

*UL61058 approved

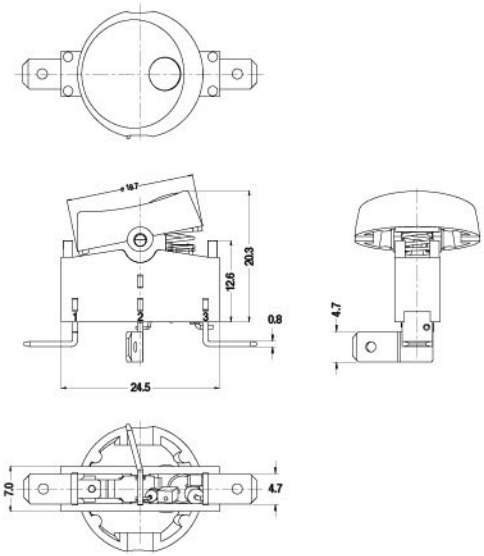

Suggested panel hole size

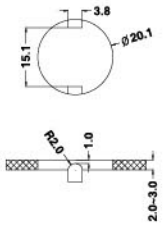

SR-93

R — L — A — 1 — BK — BK — 6 — 0 — 0 — RE — 4 — □□□□

Function		Current		
A	ON-OFF	S	1A	250VAC
D	(ON)-OFF	L	10(3)A	250VAC
E	ON-(OFF)		6(2)A	250VAC 5E4
N	ON-OFF w/lamp (Unswitched neutral)		16A GP	125VAC
R	(ON)-OFF w/lamp			

Terminal Type	
Q	10.0, 7.5, Ø1.6, 0.80, 4.7
S	4.5, Ø2.5, 0.80, 4.7
Q1	0.80, 3.8, 4.7 (Side Terminal); 0.80, 9.8, 4.70 (Middle Terminal)
A	7.5, 6.2
B	7.5, 6.2, 7.5

Base Type	
1	
2	

Base Color	
BK	Black

Button Color	
BK	Black
WT	White
GE	Grey
RE	Red
GR	Green
BL	Blue
OR	Amber
YE	Yellow

Button Type	
4	
5	
6	
R	

Printing	
0	None
1	●
2	○ —
3	○ I
8	ON OFF
9	OFF ON
A	

Color of Printing	
0	None
1	White
2	Black
3	Red
4	Blue
5	Yellow

Small Lens Color	
00	None
RE	Red
GR	Green
BL	Blue
OR	Amber

Lamp Voltage	
0	None
1	12V
2	24V
3	110V
4	220V

Internal Use Only